5V Standby Power

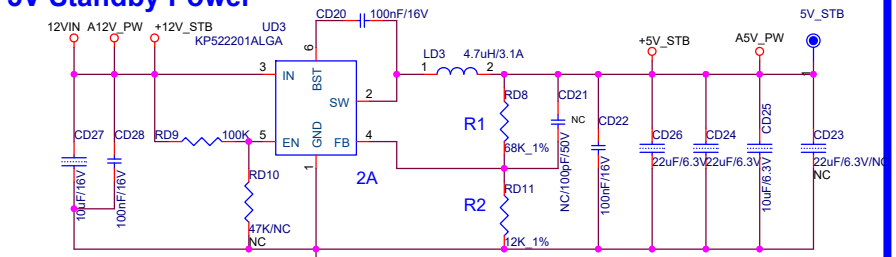

Vout=0.768*(1+R1/R2)=5.12V

CPU_1.02V POWER

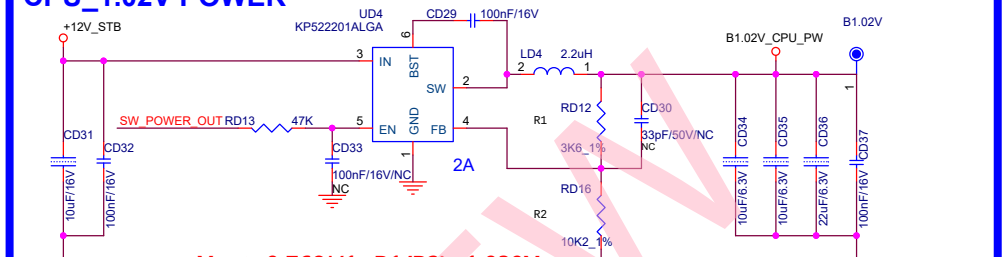

Vout=0.768*(1+R1/R2)=1.039V

3.3V Standby Power

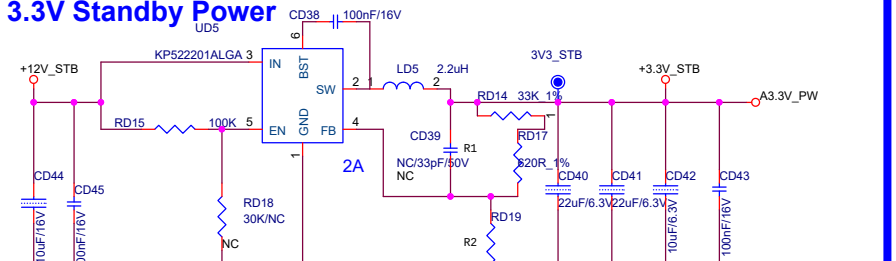

Vout=0.768*(1+R1/R2)=3.35V

+0.97V_VDDC

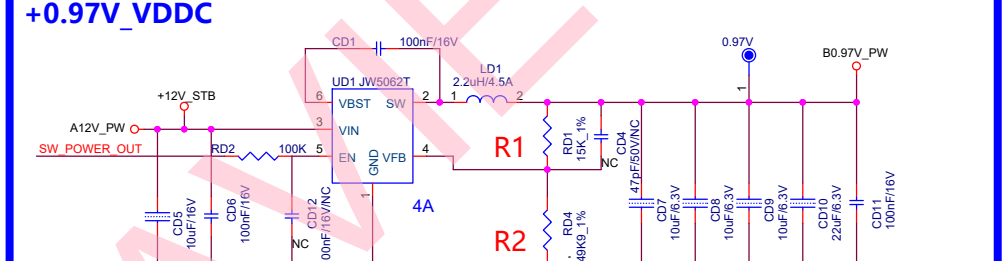

Vout=0.765*(1+R1/R2)=0.988V

+1.5V_DDR POWER

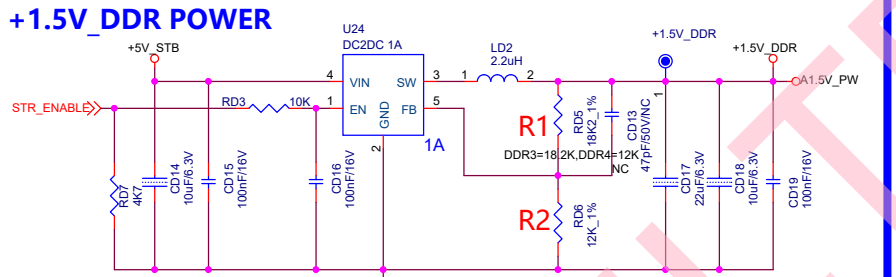

Vout=0.6*(1+R1/R2)=1.51V

SW

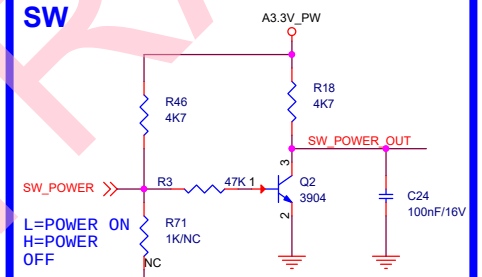

+5V_SW

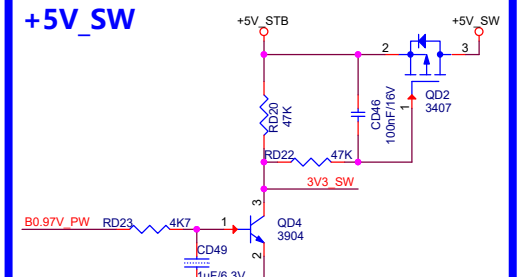

DDR4_2.5V

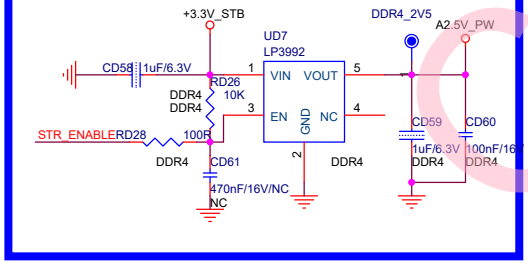

MAIN_2.5V

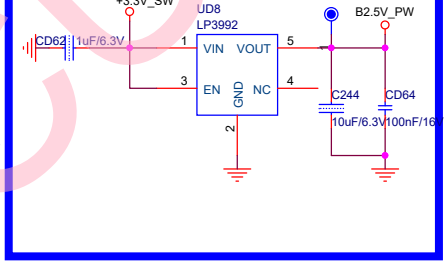

EMMC 1.8V

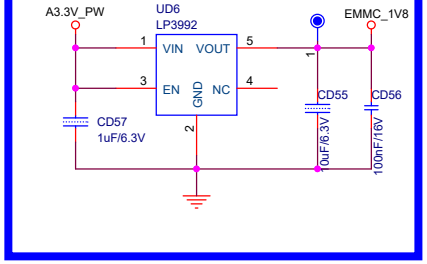

+3.3V_SW

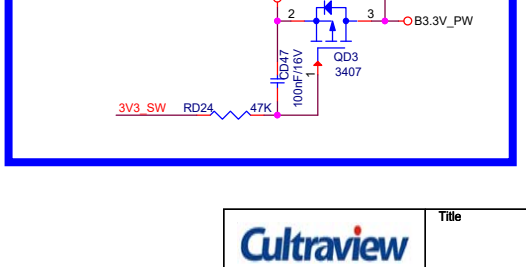

CULTRAVIEW

Cultraview	Title		
Size A3	Document Number 01.POWER		Rev V10
Date: Wednesday, February 28, 2024	Sheet 2 of 14		

IC POWER&GND

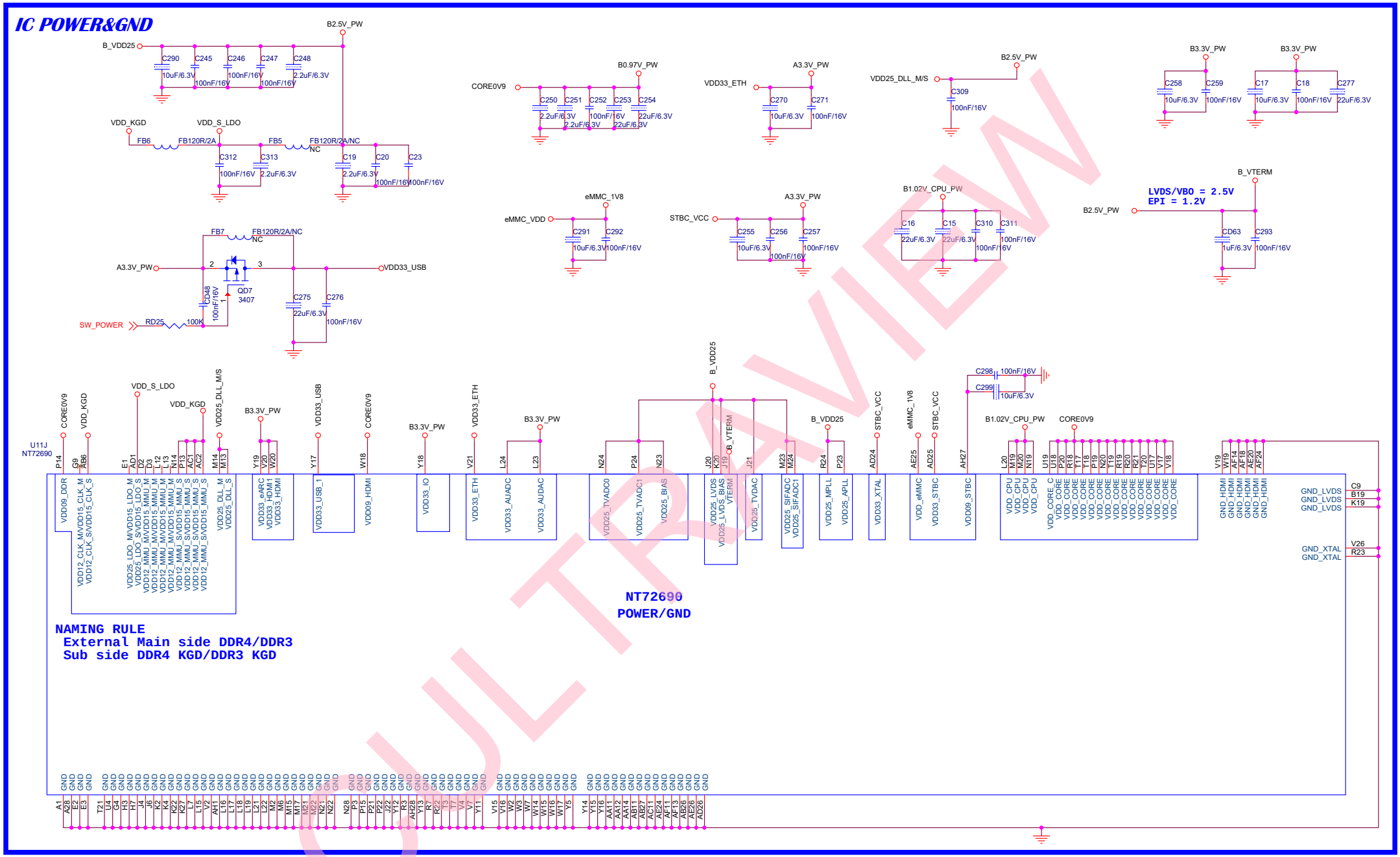

CULTRAVIEW

Cultraview	Title		
Size: Custom	Document Number: 02.IC POWER&GND		Rev: V10
Date: Wednesday, February 28, 2024	Sheet 3 of 14		

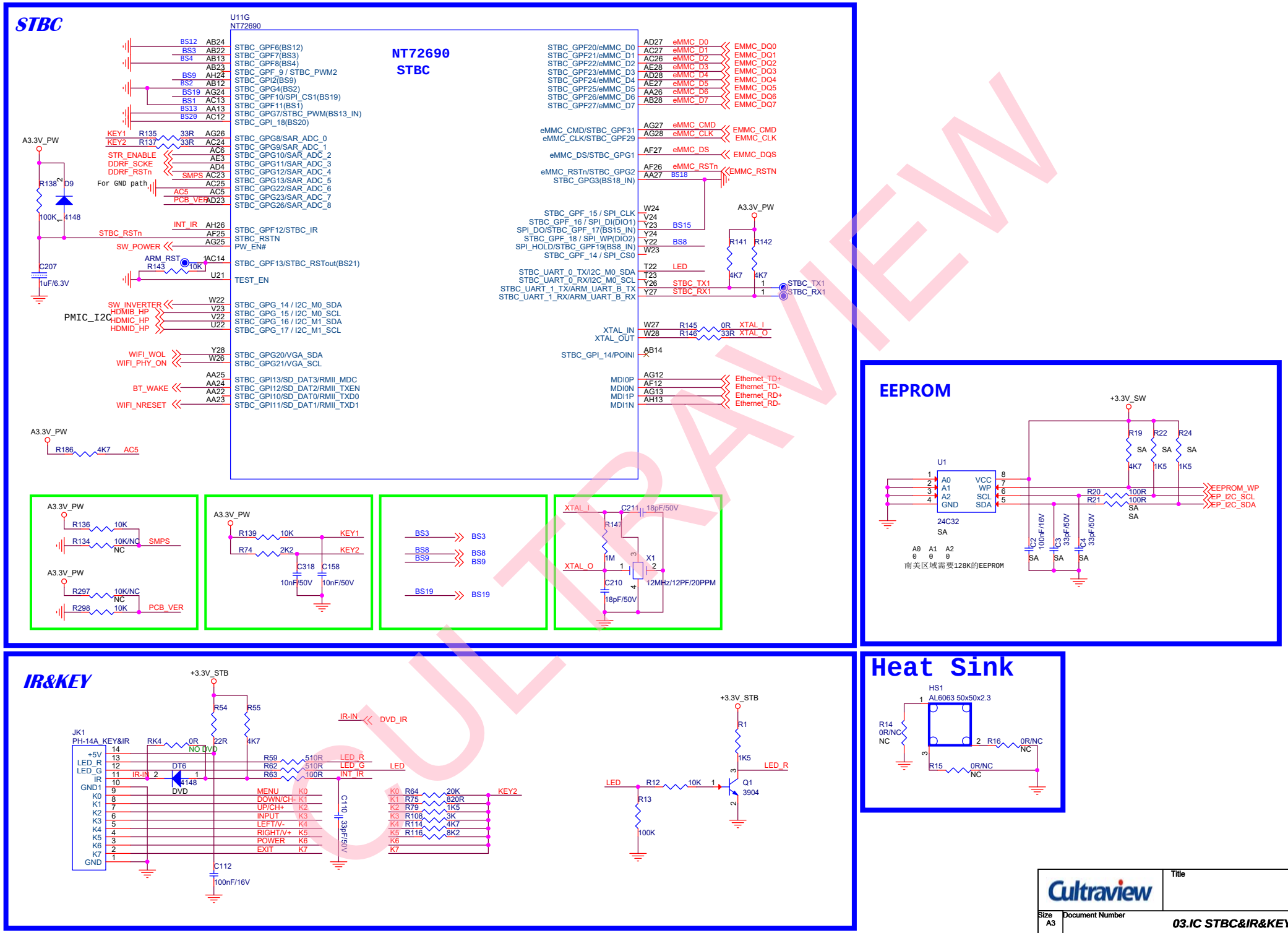
STBC
U11G
NT72690
NT72690
STBC
STBC_GPF6(BS12)
STBC_GPF7(BS3)
STBC_GPF8(BS4)
STBC_GPF_9 / STBC_PWM2
STBC_GPI2(BS9)
STBC_GPG4(BS2)
STBC_GPF10/SPI_CS1(BS19)
STBC_GPF11(BS1)
STBC_GPG7/STBC_PWM(BS13_IN)
STBC_GPI_18(BS20)
STBC_GPG8/SAR_ADC_0
STBC_GPG9/SAR_ADC_1
STBC_GPG10/SAR_ADC_2
STBC_GPG11/SAR_ADC_3
STBC_GPG12/SAR_ADC_4
STBC_GPG13/SAR_ADC_5
STBC_GPG22/SAR_ADC_6
STBC_GPG23/SAR_ADC_7
STBC_GPG26/SAR_ADC_8
STBC_GPF12/STBC_IR
STBC_RSTN
PW_EN#
STBC_GPF13/STBC_RSTout(BS21)
TEST_EN
STBC_GPG_14 / I2C_M0_SDA
STBC_GPG_15 / I2C_M0_SCL
STBC_GPG_16 / I2C_M1_SDA
STBC_GPG_17 / I2C_M1_SCL
STBC_GPG20/VGA_SDA
STBC_GPG21/VGA_SCL
STBC_GPI13/SD_DAT3/RMII_MDC
STBC_GPI12/SD_DAT2/RMII_TXEN
STBC_GPI10/SD_DAT0/RMII_TXD0
STBC_GPI11/SD_DAT1/RMII_TXD1
STBC_GPF20/eMMC_D0
STBC_GPF21/eMMC_D1
STBC_GPF22/eMMC_D2
STBC_GPF23/eMMC_D3
STBC_GPF24/eMMC_D4
STBC_GPF25/eMMC_D5
STBC_GPF26/eMMC_D6
STBC_GPF27/eMMC_D7
eMMC_CMD/STBC_GPF31
eMMC_CLK/STBC_GPF29
eMMC_DS/STBC_GPG1
eMMC_RSTn/STBC_GPG2
STBC_GPG3(BS18_IN)
STBC_GPF_15 / SPI_CLK
STBC_GPF_16 / SPI_DI(DIO1)
SPI_DO/STBC_GPF_17(BS15_IN)
STBC_GPF_18 / SPI_WP(DIO2)
SPI_HOLD/STBC_GPF19(BS8_IN)
STBC_GPF_14 / SPI_CS0
STBC_UART_0_TX/I2C_M0_SDA
STBC_UART_0_RX/I2C_M0_SCL
STBC_UART_1_TX/ARM_UART_B_TX
STBC_UART_1_RX/ARM_UART_B_RX
XTAL_IN
XTAL_OUT
STBC_GPI_14/POINI
MDI0P
MDI0N
MDI1P
MDI1N
EMMC_DQ0
EMMC_DQ1
EMMC_DQ2
EMMC_DQ3
EMMC_DQ4
EMMC_DQ5
EMMC_DQ6
EMMC_DQ7
EMMC_CMD
EMMC_CLK
EMMC_DQS
EMMC_RSTN
STBC_TX1
STBC_RX1
XTAL_I
XTAL_O
Ethernet_TD+
Ethernet_TD-
Ethernet_RD+
Ethernet_RD-
A3.3V_PW
KEY1
KEY2
STR_ENABLE
DDRF_SCKE
DDRF_RSTn
SMPS
PCB_VER
For GND path
STBC_RSTn
SW_POWER
INT_IR
ARM_RST
SW_INVERTER
HDMIB_HP
HDMIC_HP
HDMID_HP
PMIC_I2C
WIFI_WOL
WIFI_PHY_ON
BT_WAKE
WIFI_NRESET
LED
BS15
BS8
BS18
BS3
BS19
R135 33R
R137 33R
R138 100K
D9 4148
C207 1uF/6.3V
R143 10K
R141 4K7
R142 4K7
R145 0R
R146 33R
R186 4K7
R136 10K
R134 10K/NC
R297 10K/NC
R298 10K
R139 10K
R74 2K2
C318 10nF/50V
C158 10nF/50V
C211 18pF/50V
R147 1M
C210 18pF/50V
X1 12MHz/12PF/20PPM
BS8
BS9
EEPROM
+3.3V_SW
U1
A0
A1
A2
GND
VCC
WP
SCL
SDA
24C32
SA
R19 4K7
R22 1K5
R24 1K5
R20 100R
R21 100R
EEPROM_WP
EP_I2C_SCL
EP_I2C_SDA
C2 100nF/16V
C3 33pF/50V
C4 33pF/50V
南美区域需要128K的EEPROM
Heat Sink
HS1
AL6063 50x50x2.3
R14 0R/NC
R16 0R/NC
R15 0R/NC
IR&KEY
+3.3V_STB
JK1
PH-14A_KEY&IR
R54 22R
R55 4K7
RK4 0R
NO DVD
DT6 4148
DVD
IR-IN
DVD_IR
R59 510R
R62 510R
R63 100R
LED_R
LED_G
INT_IR
MENU
DOWN/CH-
UP/CH+
INPUT
LEFT/V-
RIGHT/V+
POWER
EXIT
C110 33pF/50V
C112 100nF/16V
R64 20K
R75 820R
R79 1K5
R108 3K
R114 4K7
R116 8K2
KEY2
R1 1K5
Q1 3904
R12 10K
R13 100K
Cultraview
Title
Size A3
Document Number
03.IC STBC&IR&KEY
Rev V10
Date: Wednesday, February 28, 2024
Sheet 4 of 14
CULTRAVIEW

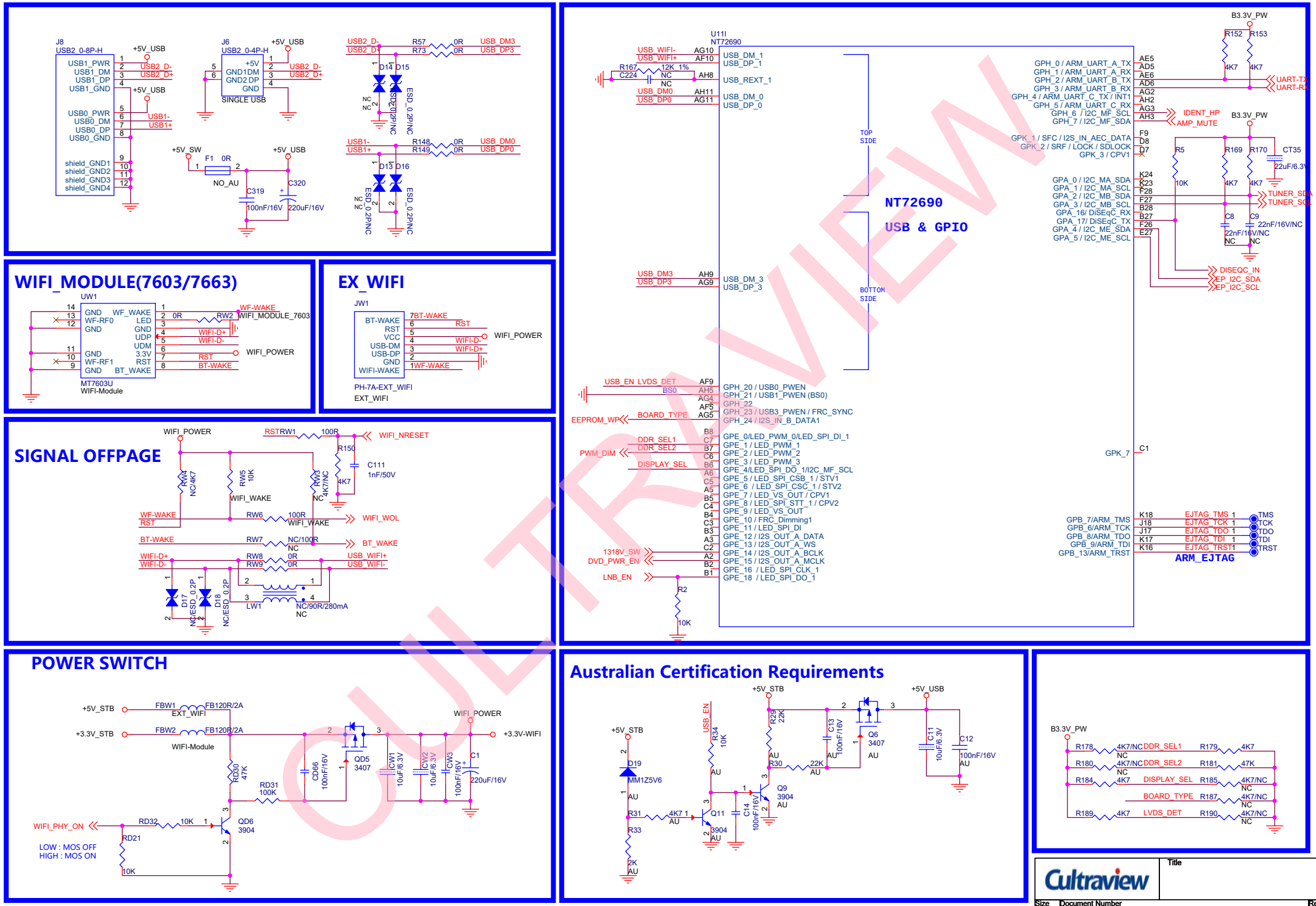
J8
USB2_0-8P-H
J6
USB2_0-4P-H
SINGLE USB
+5V_USB
USB2_D-
USB2_D+
USB1_PWR
USB1_DM
USB1_DP
USB1_GND
USB0_PWR
USB0_DM
USB0_DP
USB0_GND
USB1-
USB1+
shield_GND1
shield_GND2
shield_GND3
shield_GND4
+5V_SW
F1 0R
NO_AU
C319
100nF/16V
C320
220uF/16V
R57 0R
R73 0R
USB_DM3
USB_DP3
D14 D15
ESD_0.2P/NC
R148 0R
R149 0R
USB_DM0
USB_DP0
D13 D16
WIFI_MODULE(7603/7663)
UW1
GND
WF_WAKE
WF-RF0
LED
UDP
UDM
3.3V
RST
BT_WAKE
WF-RF1
MT7603U
WIFI-Module
RW2 0R
WIFI_MODULE_7603
WIFI-D+
WIFI-D-
WIFI_POWER
BT-WAKE
EX_WIFI
JW1
BT-WAKE
RST
VCC
USB-DM
USB-DP
GND
WIFI-WAKE
PH-7A-EXT_WIFI
EXT_WIFI
SIGNAL OFFPAGE
WIFI_POWER
RSTRW1 100R
WIFI_NRESET
R150
C111
1nF/50V
RW4 NC/4K7
RW5 10K
RW3 4K7/NC
4K7
WIFI_WAKE
WF-WAKE
RST
RW6 100R
WIFI_WOL
BT-WAKE
RW7 NC/100R
WIFI-D+
WIFI-D-
RW8 0R
RW9 0R
USB_WIFI+
USB_WIFI-
D17 NC/ESD_0.2P
D18 NC/ESD_0.2P
LW1 NC/90R/280mA
NC
U11I
NT72690
USB_WIFI-
USB_WIFI+
R167 12K 1%
C224 NC
USB_DM0
USB_DP0
USB_DM_1
USB_DP_1
USB_REXT_1
USB_DM_0
USB_DP_0
TOP SIDE
NT72690
USB & GPIO
BOTTOM SIDE
USB_DM3
USB_DP3
USB_DM_3
USB_DP_3
USB_EN_LVDS_DET
BS0
GPH_20 / USB0_PWEN
GPH_21 / USB1_PWEN (BS0)
GPH_22
GPH_23 / USB3_PWEN / FRC_SYNC
GPH_24 / I2S_IN_B_DATA1
EEPROM_WP
BOARD_TYPE
DDR_SEL1
DDR_SEL2
PWM_DIM
DISPLAY_SEL
GPE_0/LED_PWM_0/LED_SPI_DI_1
GPE_1 / LED_PWM_1
GPE_2 / LED_PWM_2
GPE_3 / LED_PWM_3
GPE_4/LED_SPI_DO_1/I2C_MF_SCL
GPE_5 / LED_SPI_CSB_1 / STV1
GPE_6 / LED_SPI_CSC_1 / STV2
GPE_7 / LED_VS_OUT / CPV1
GPE_8 / LED_SPI_STT_1 / CPV2
GPE_9 / LED_VS_OUT
GPE_10 / FRC_Dimming1
GPE_11 / LED_SPI_DI
GPE_12 / I2S_OUT_A_DATA
GPE_13 / I2S_OUT_A_WS
GPE_14 / I2S_OUT_A_BCLK
GPE_15 / I2S_OUT_A_MCLK
GPE_16 / LED_SPI_CLK_1
GPE_18 / LED_SPI_DO_1
1318V_SW
DVD_PWR_EN
LNB_EN
R2 10K
B3.3V_PW
R152 R153
4K7
GPH_0 / ARM_UART_A_TX
GPH_1 / ARM_UART_A_RX
GPH_2 / ARM_UART_B_TX
GPH_3 / ARM_UART_B_RX
GPH_4 / ARM_UART_C_TX / INT1
GPH_5 / ARM_UART_C_RX
GPH_6 / I2C_MF_SCL
GPH_7 / I2C_MF_SDA
UART-TX
UART-RX
IDENT_HP
AMP_MUTE
GPK_1 / SFC / I2S_IN_AEC_DATA
GPK_2 / SRF / LOCK / SDLOCK
GPK_3 / CPV1
R5 10K
R169 4K7
R170 4K7
CT35 22uF/6.3V
GPA_0 / I2C_MA_SDA
GPA_1 / I2C_MA_SCL
GPA_2 / I2C_MB_SDA
GPA_3 / I2C_MB_SCL
GPA_16/ DiSEqC_RX
GPA_17/ DiSEqC_TX
GPA_4 / I2C_ME_SDA
GPA_5 / I2C_ME_SCL
TUNER_SDA
TUNER_SCL
C8 22nF/16V/NC
C9 22nF/16V/NC
DISEQC_IN
EP_I2C_SDA
EP_I2C_SCL
GPK_7
GPB_7/ARM_TMS
GPB_6/ARM_TCK
GPB_8/ARM_TDO
GPB_9/ARM_TDI
GPB_13/ARM_TRST
EJTAG_TMS
EJTAG_TCK
EJTAG_TDO
EJTAG_TDI
EJTAG_TRST
TMS
TCK
TDO
TDI
TRST
ARM_EJTAG
POWER SWITCH
+5V_STB
FBW1 FB120R/2A
EXT_WIFI
+3.3V_STB
FBW2 FB120R/2A
WIFI-Module
WIFI_POWER
+3.3V-WIFI
RD30 47K
RD31 100K
CD66 100nF/16V
QD5 3407
CW1 10uF/6.3V
CW2 10uF/6.3V
CW3 100nF/16V
C1 220uF/16V
WIFI_PHY_ON
RD32 10K
QD6 3904
RD21 10K
LOW : MOS OFF
HIGH : MOS ON
Australian Certification Requirements
+5V_STB
USB_EN
R34 10K
D19 MM1Z5V6
R31 4K7
R33 2K
Q11 3904
R29 22K
R30 22K
C13 100nF/16V
C14 100nF/16V
Q9 3904
Q6 3407
+5V_USB
C11 10uF/6.3V
C12 100nF/16V
B3.3V_PW
R178 4K7/NC DDR_SEL1 R179 4K7
R180 4K7/NC DDR_SEL2 R181 47K
R184 4K7 DISPLAY_SEL R185 4K7/NC
BOARD_TYPE R187 4K7/NC
R189 4K7 LVDS_DET R190 4K7/NC
Cultraview
Title
Size A3
Document Number
04.USB&GPIO
Rev V10
Date: Wednesday, February 28, 2024
Sheet 5 of 14
CULTRAVIEW

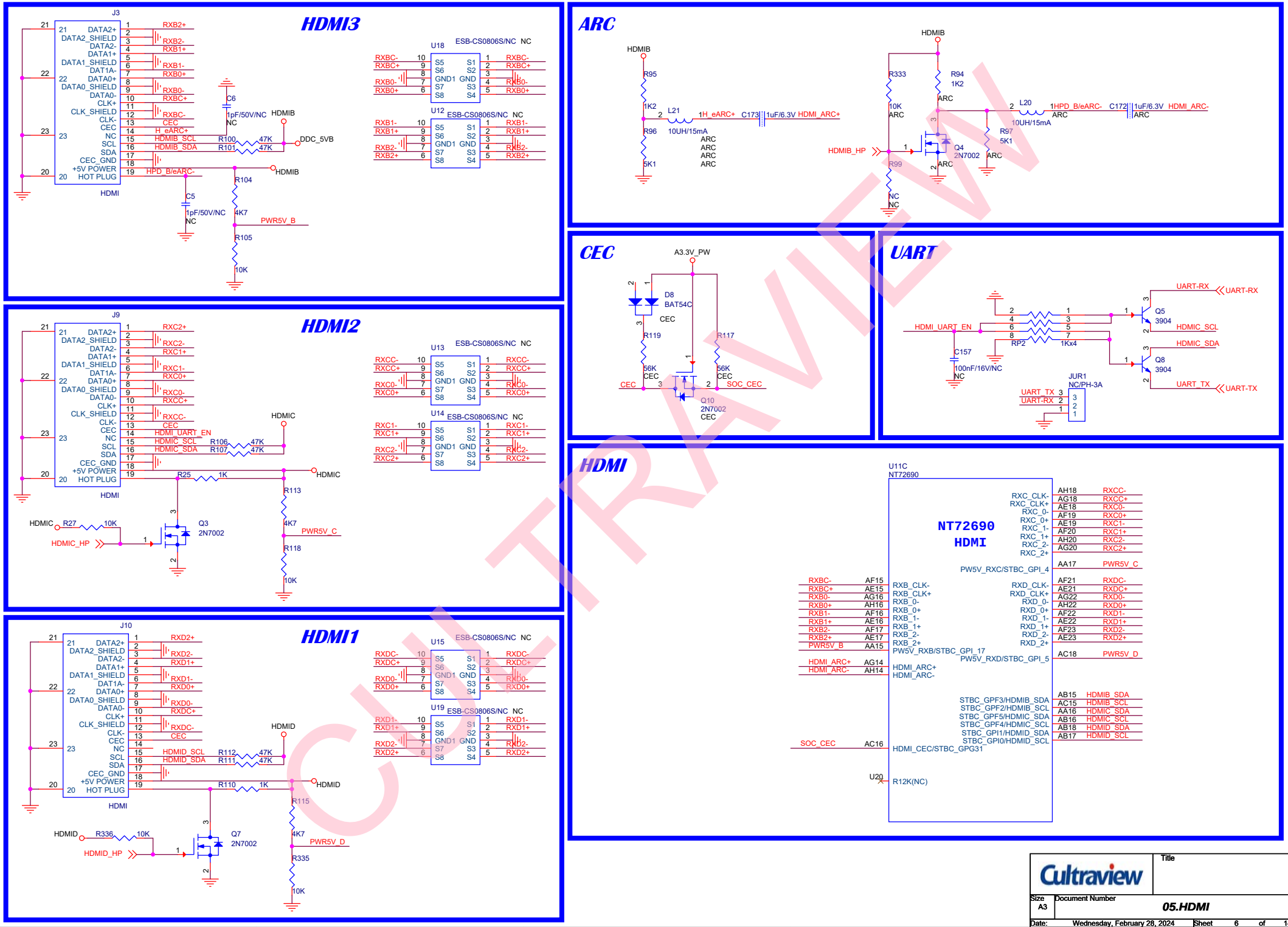
HDMI3
J3
HDMI
DATA2+
DATA2_SHIELD
DATA2-
DATA1+
DATA1_SHIELD
DATA1A-
DATA0+
DATA0_SHIELD
DATA0-
CLK+
CLK_SHIELD
CLK-
CEC
NC
SCL
SDA
CEC_GND
+5V POWER
HOT PLUG
RXB2+
RXB2-
RXB1+
RXB1-
RXB0+
RXB0-
RXBC+
RXBC-
CEC
H_eARC+
HDMIB_SCL
HDMIB_SDA
HPD_B/eARC-
C6
1pF/50V/NC
NC
HDMIB
R100
47K
R101
47K
DDC_5VB
R104
4K7
C5
1pF/50V/NC
NC
PWR5V_B
R105
10K
U18
ESB-CS0806S/NC NC
U12
ESB-CS0806S/NC NC
HDMI2
J9
RXC2+
RXC2-
RXC1+
RXC1-
RXC0+
RXC0-
RXCC+
RXCC-
HDMI_UART_EN
HDMIC_SCL
HDMIC_SDA
R106
47K
R107
47K
HDMIC
R25
1K
R113
4K7
PWR5V_C
R118
10K
HDMIC
R27
10K
HDMIC_HP
Q3
2N7002
U13
ESB-CS0806S/NC NC
U14
ESB-CS0806S/NC NC
HDMI1
J10
RXD2+
RXD2-
RXD1+
RXD1-
RXD0+
RXD0-
RXDC+
RXDC-
CEC
HDMID_SCL
HDMID_SDA
R112
47K
R111
47K
HDMID
R110
1K
R115
4K7
PWR5V_D
R335
10K
HDMID
R336
10K
HDMID_HP
Q7
2N7002
U15
ESB-CS0806S/NC NC
U19
ESB-CS0806S/NC NC
ARC
HDMIB
R95
1K2
R96
5K1
L21
10UH/15mA
1H_eARC+
C173
1uF/6.3V
HDMI_ARC+
R333
10K
ARC
R94
1K2
HDMIB_HP
R99
NC
Q4
2N7002
R97
5K1
L20
10UH/15mA
1HPD_B/eARC-
C172
1uF/6.3V
HDMI_ARC-
CEC
A3.3V_PW
D8
BAT54C
R119
56K
CEC
R117
56K
CEC
SOC_CEC
Q10
2N7002
UART
UART-RX
HDMI_UART_EN
RP2
1Kx4
C157
100nF/16V/NC
NC
Q5
3904
HDMIC_SCL
HDMIC_SDA
Q8
3904
UART_TX
JUR1
NC/PH-3A
HDMI
U11C
NT72690
NT72690
HDMI
RXC_CLK-
RXC_CLK+
RXC_0-
RXC_0+
RXC_1-
RXC_1+
RXC_2-
RXC_2+
PW5V_RXC/STBC_GPI_4
RXB_CLK-
RXB_CLK+
RXB_0-
RXB_0+
RXB_1-
RXB_1+
RXB_2-
RXB_2+
PW5V_RXB/STBC_GPI_17
RXD_CLK-
RXD_CLK+
RXD_0-
RXD_0+
RXD_1-
RXD_1+
RXD_2-
RXD_2+
PW5V_RXD/STBC_GPI_5
HDMI_ARC+
HDMI_ARC-
STBC_GPF3/HDMIB_SDA
STBC_GPF2/HDMIB_SCL
STBC_GPF5/HDMIC_SDA
STBC_GPF4/HDMIC_SCL
STBC_GPI1/HDMID_SDA
STBC_GPI0/HDMID_SCL
HDMI_CEC/STBC_GPG31
U20
R12K(NC)
Cultraview
Title
Size
A3
Document Number
05.HDMI
Rev
V10
Date:
Wednesday, February 28, 2024
Sheet
6
of
14
CULTRAVIEW

DDR_S

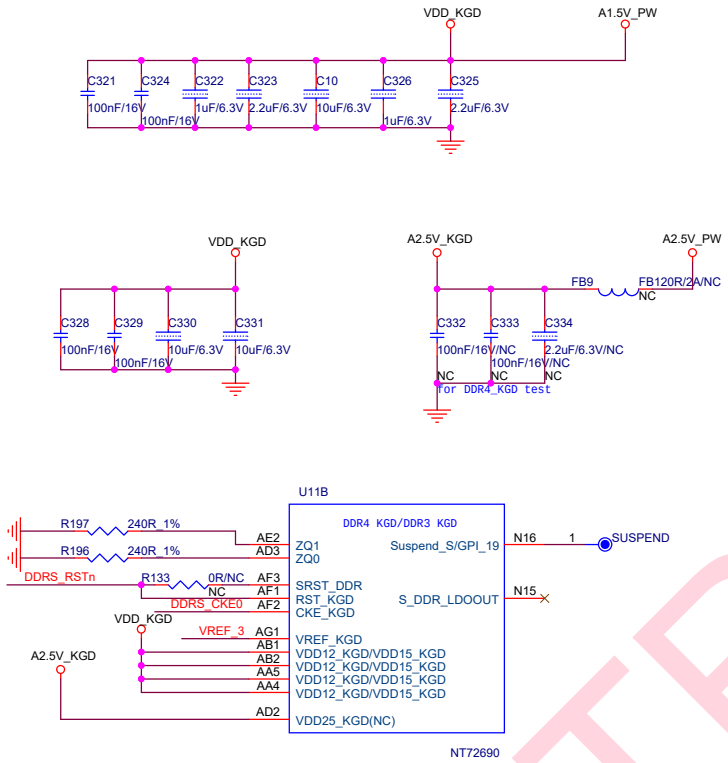

DDR_M

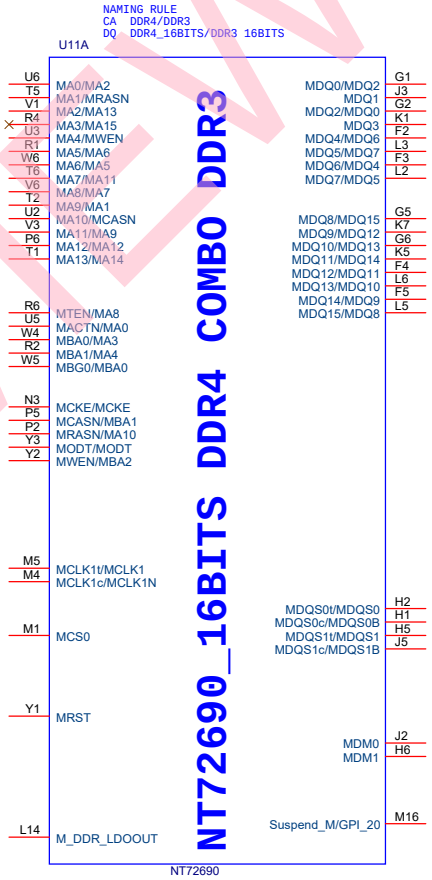

CULTRAVIEW

Cultraview	Title	
Size A3	Document Number 06.DDR	Rev V10
Date: Wednesday, February 28, 2024	Sheet 7 of 14	

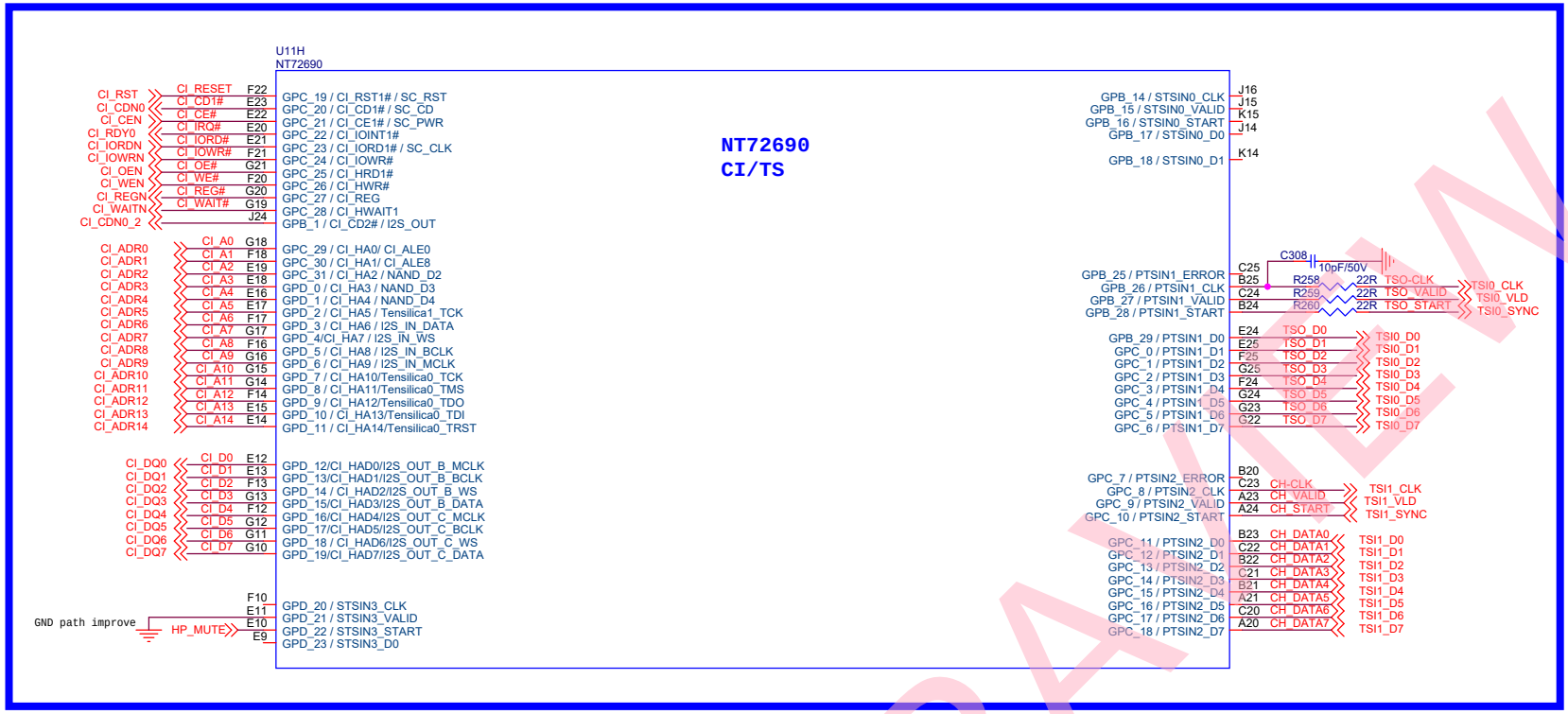

CPU Side:

BS0_Bypass CPU MaskROM

0 : Using CPU MaskROM
1 : Bypass CPU MaskROM

STBC Side:

BS1_STBC Boot Strap Option

0: Boot from STBC
1: Boot from CPU, bypass STBC.

BS2_Bypass STBC MaskROM

When BS1=0,
0: Through STBC MaskROM
1: Bypass STBC MaskROM

BS8_STBC watchdog

0: Default disable STBC watchdog
1: Default enable STBC watchdog

BS19_Internal boot strap for NF/eMMC type

0: NF/eMMC type internal boot strap enable
1: NF/eMMC type internal boot strap disable
(BS[7:6] = 00, BS8 is external; BS[17:16]=00,BS14=0, BS13,BS15,BS18 are external)

BS12=0 , BS3,BS4_Device

BS4, 3 =
00: STBC boot from SPI, CPU boot from eMMC
01: STBC & CPU both boot from eMMC
10: STBC & CPU both boot from SPI
11: Reserved (same 00)

eMMC:

BS13_eMMC bus width

BS13 =
0: EMMC Bus width is 8 bit
1: EMMC Bus width is 4 bit

BS15_eMMC ACK

0: Boot mode wait ACK
1: Boot mode do not wait ACK

BS18_EMMC clk_switch

0: 26M
1: 13M

BS9_Security boot

0: no security boot
1: security boot

BS10_SPI Flash scramble

0: Disable
1: Enable

BS11_Turnkey Security

0: Disable
1: Enable

Internal Bootstrap

BS20_NAND I/O

0: NAND I/O in STBC eMMC side (BS12 = 1)
1: NAND I/O in ARM CI side (BS12 = 1, BS[4:3] = 00, 11)
or STBC SPI side (BS12 = 1, BS[4:3] = 01, 10)

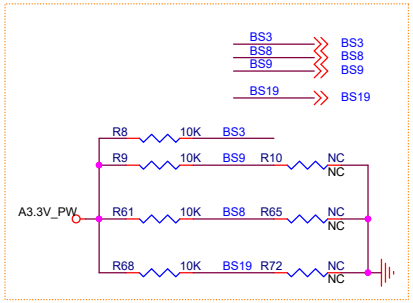

CULTRAVIEW

Cultraview	Title	
Size A3	Document Number 07.CI/TS	Rev V10
Date: Wednesday, February 28, 2024	Sheet 8 of 14	

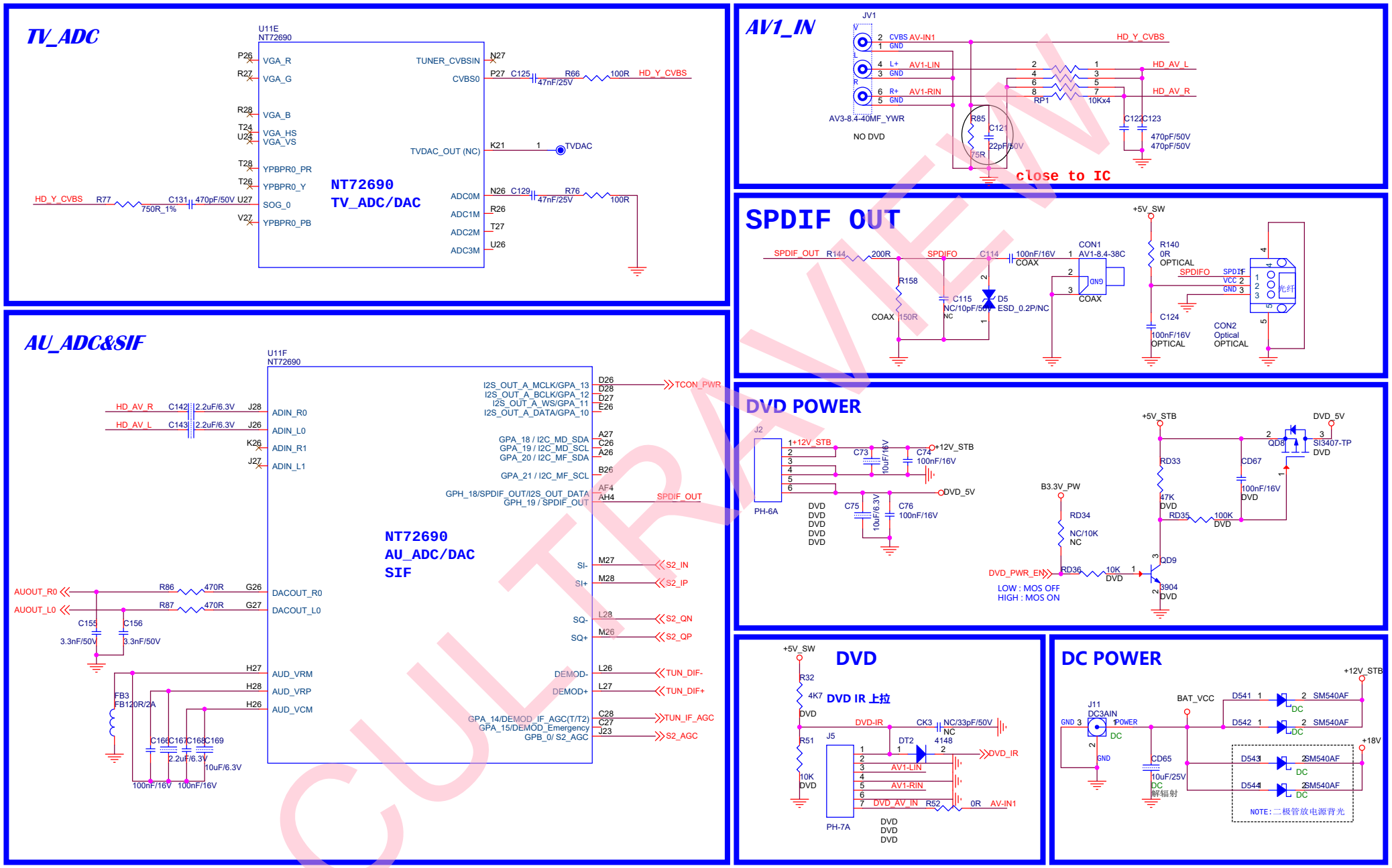

Cultraview	Title		
Size A3	Document Number	08.AV_IN&SPDIF	Rev V10
Date: Wednesday, February 28, 2024	Sheet 9 of 14		

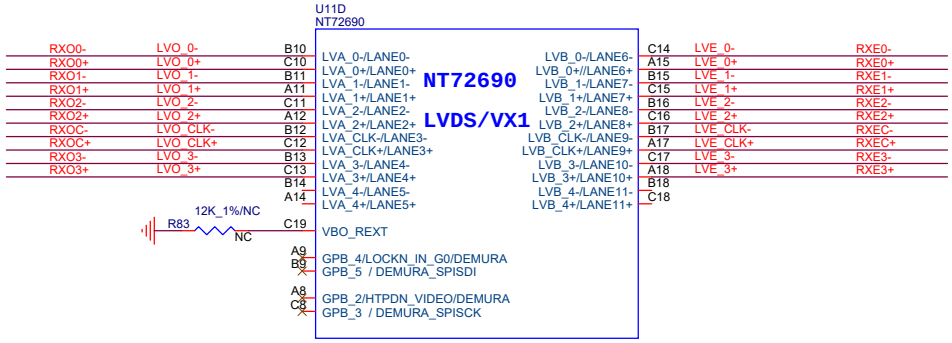

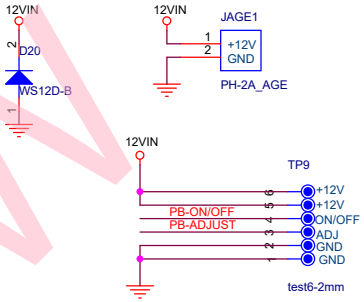

PANEL POWER

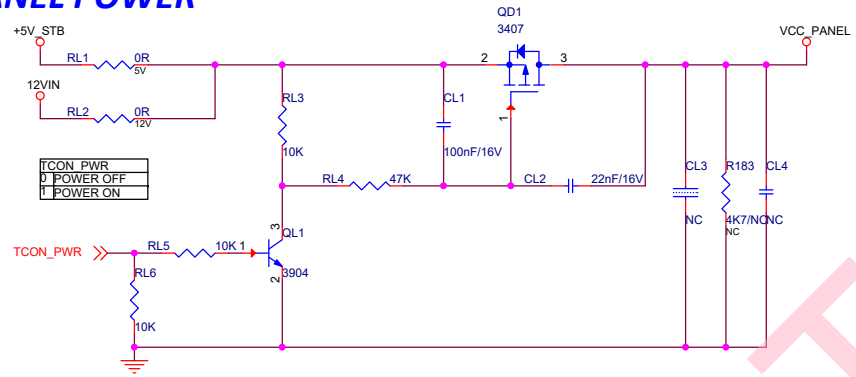

LVDS

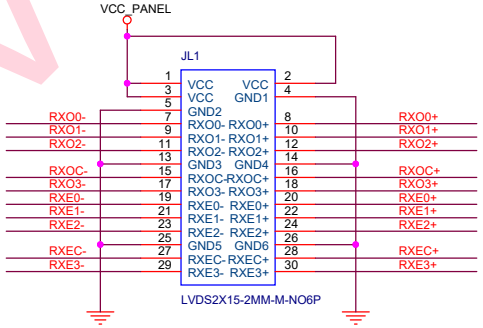

BackLight Controler

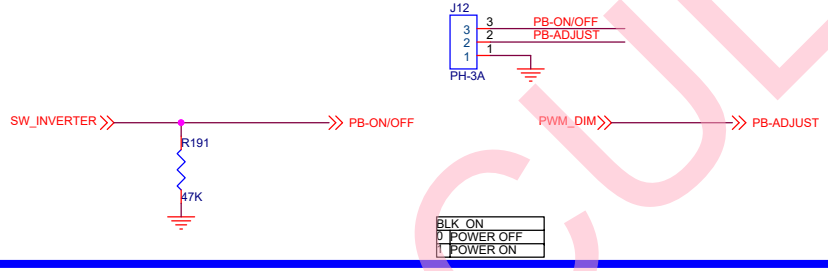

MARK & HOLE

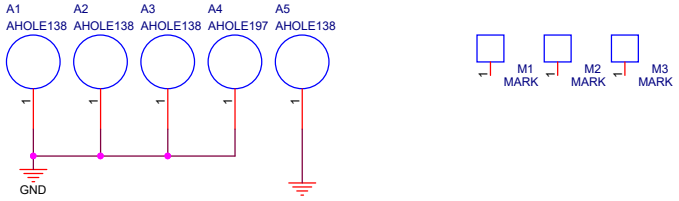

CULTRAVIEW

Cultraview	Title	CV72690	
Size A3	Document Number	09. PANEL/KEY	Rev 10
Date: Wednesday, February 28, 2024	Sheet 10 of 14		

EMMC

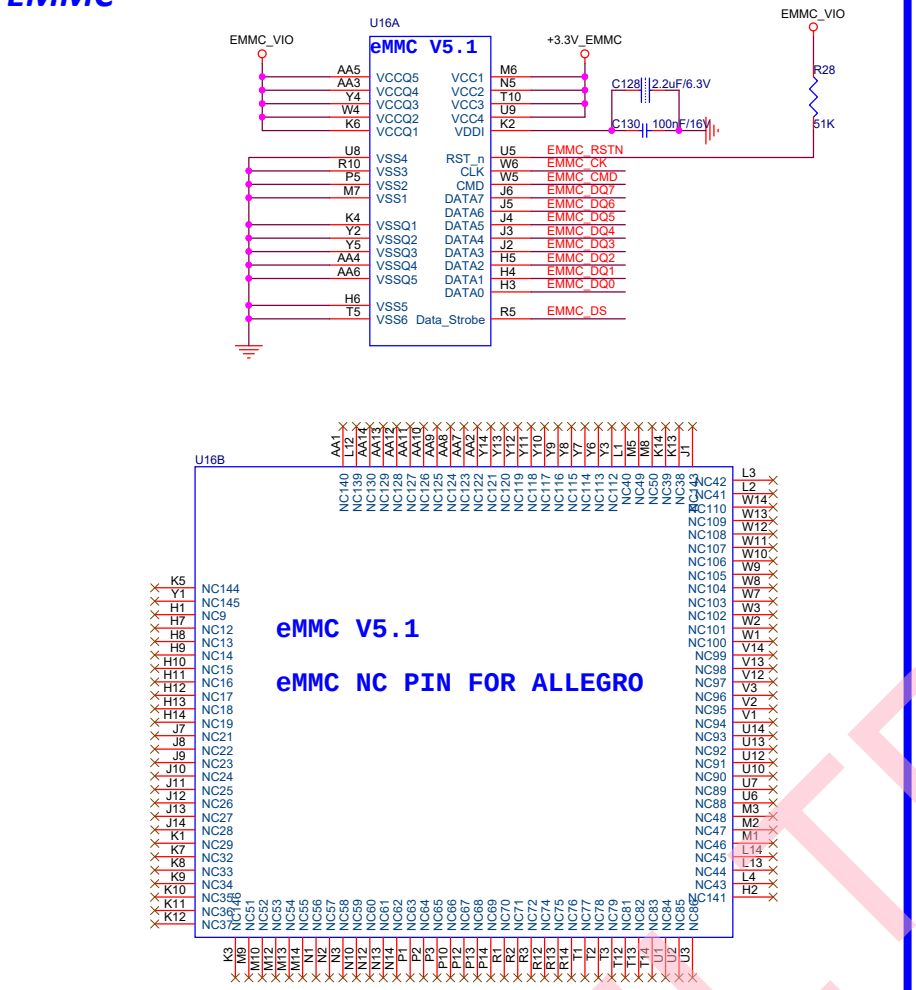

EMMC NET

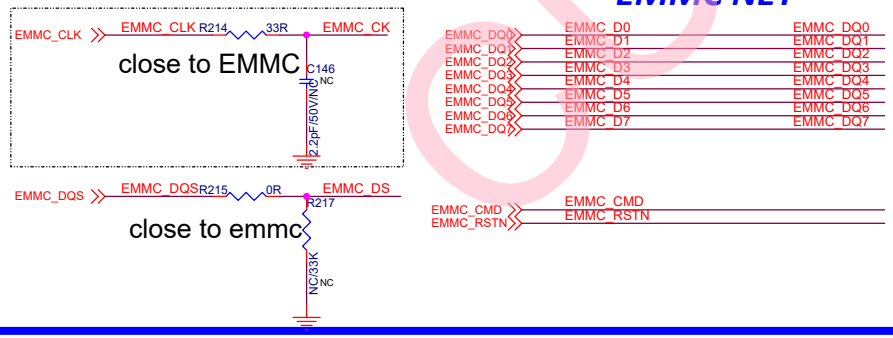

Ethernet Connetor

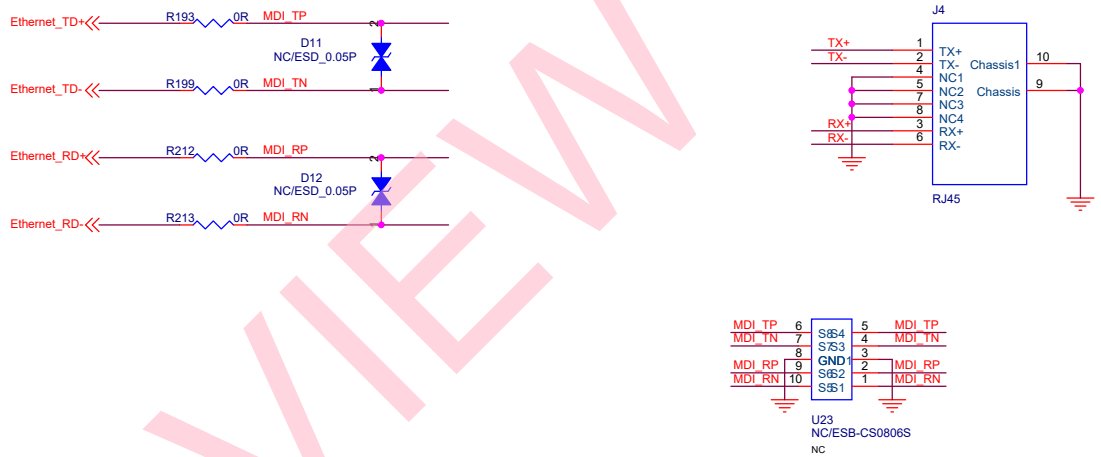

ENTHERNET 分立

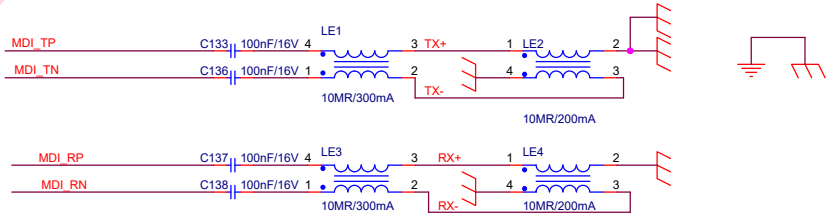

EMMC Power

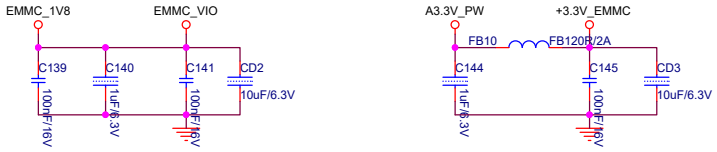

CULTRAVIEW

Cultraview	Title	
Size A3	Document Number 10. EMMC/ENTHERNET	Rev 10
Date: Wednesday, February 28, 2024	Sheet 11 of 14	

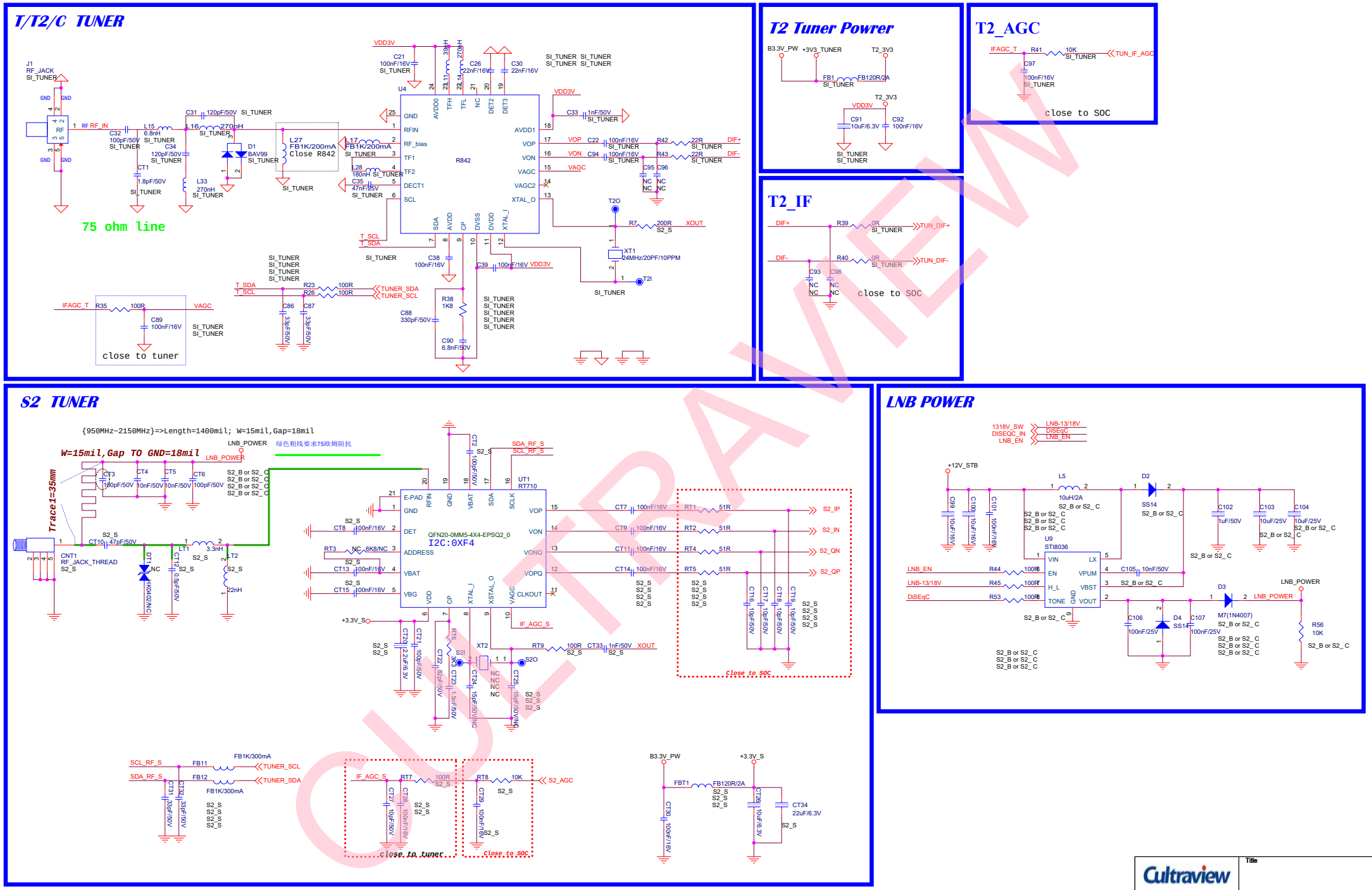
T/T2/C TUNER
J1
RF_JACK
SI_TUNER
75 ohm line
U4
R842
close to tuner
T2 Tuner Powrer
B3.3V_PW
+3V3_TUNER
T2_3V3
FB1
FB120R/2A
SI_TUNER
T2_AGC
IFAGC_T
R41
10K
TUN_IF_AGC
C97
100nF/16V
close to SOC
T2_IF
DIF+
DIF-
R39
R40
TUN_DIF+
TUN_DIF-
close to SOC
S2 TUNER
{950MHz~2150MHz}=>Length=1400mil; W=15mil,Gap=18mil
W=15mil,Gap TO GND=18mil
Trace1=35mm
LNB_POWER
绿色粗线要求75欧姆阻抗
CNT1
RF_JACK_THREAD
QFN20-0MM5-4X4-EPSQ2_0
T2C:0XF4
UT1
RT710
Close to SOC
close to tuner
LNB POWER
1318V_SW
DISEQC_IN
LNB_EN
LNB-13/18V
DISEqC
+12V_STB
U9
ST18036
M7(1N4007)
R56
10K
Cultraview
Title
Size
Custom
Document Number
11.T2&S2&LNB
Rev
V10
Date:
Wednesday, February 28, 2024
Sheet
12
of
14
CULTRAVIEW

CI Socket

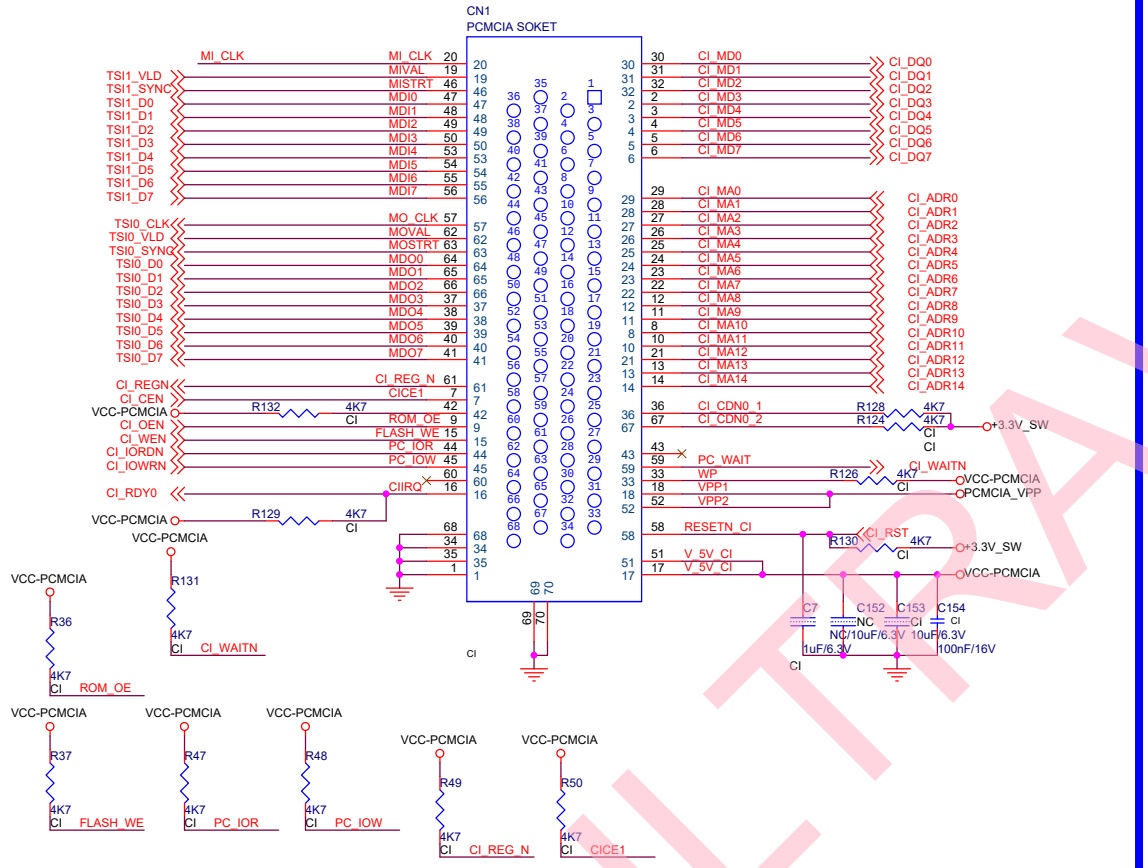

PCMCIA POWER

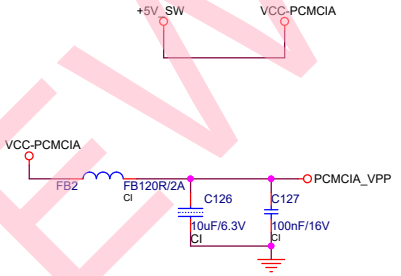

CLK

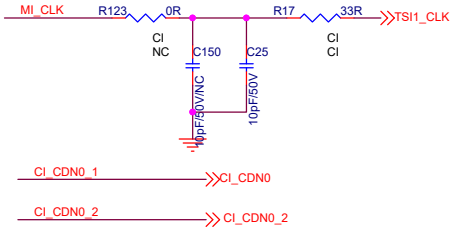

CULTRAVIEW

Cultraview	Title	
Size A3	Document Number 12. PCMCIA	Rev 10
Date: Wednesday, February 28, 2024	Sheet 13 of 14	

AMPLIFY

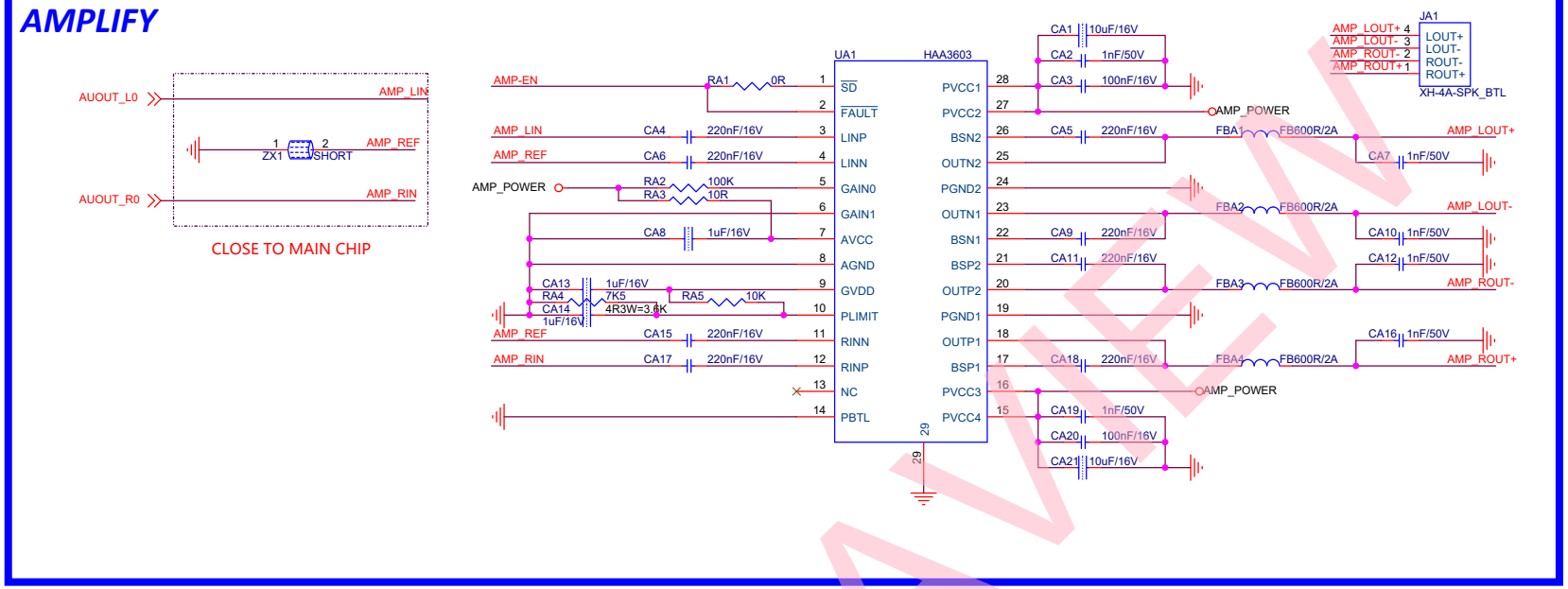

Headphone OP

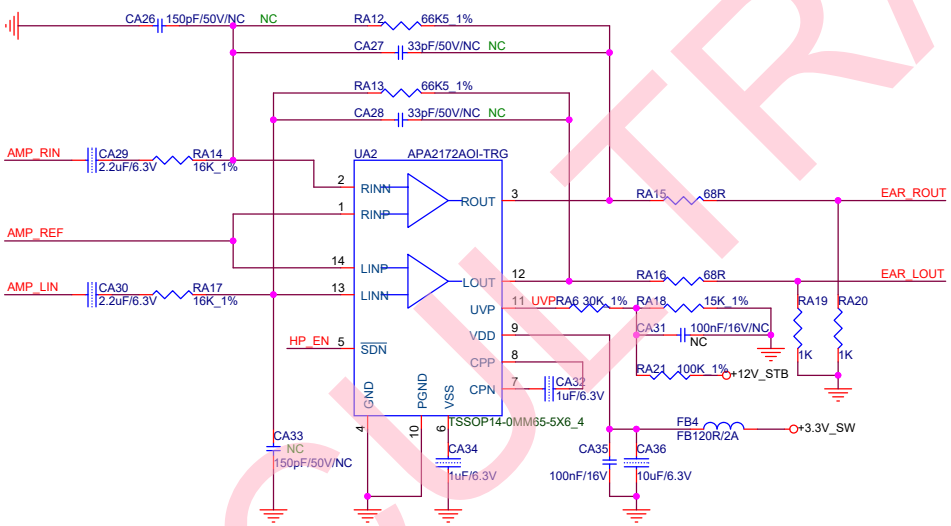

POWER

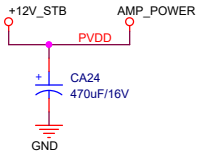

HP_MUTE

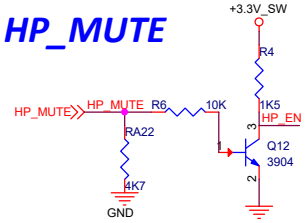

MUTE

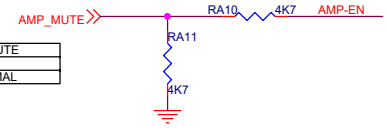

AMP_MUTE	
0	MUTE
1	NORMAL

EARPHONE

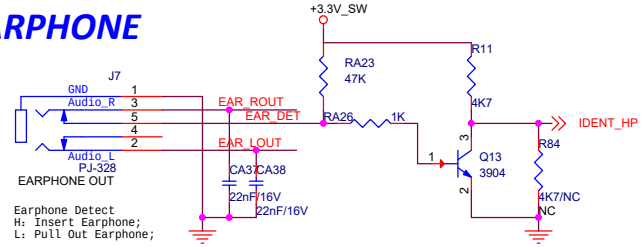

CULTRAVIEW

Cultraview	Title	
Size A3	Document Number 13. AMPLIFY/EARPHONE	Rev 10
Date: Wednesday, February 28, 2024	Sheet 14 of 14	

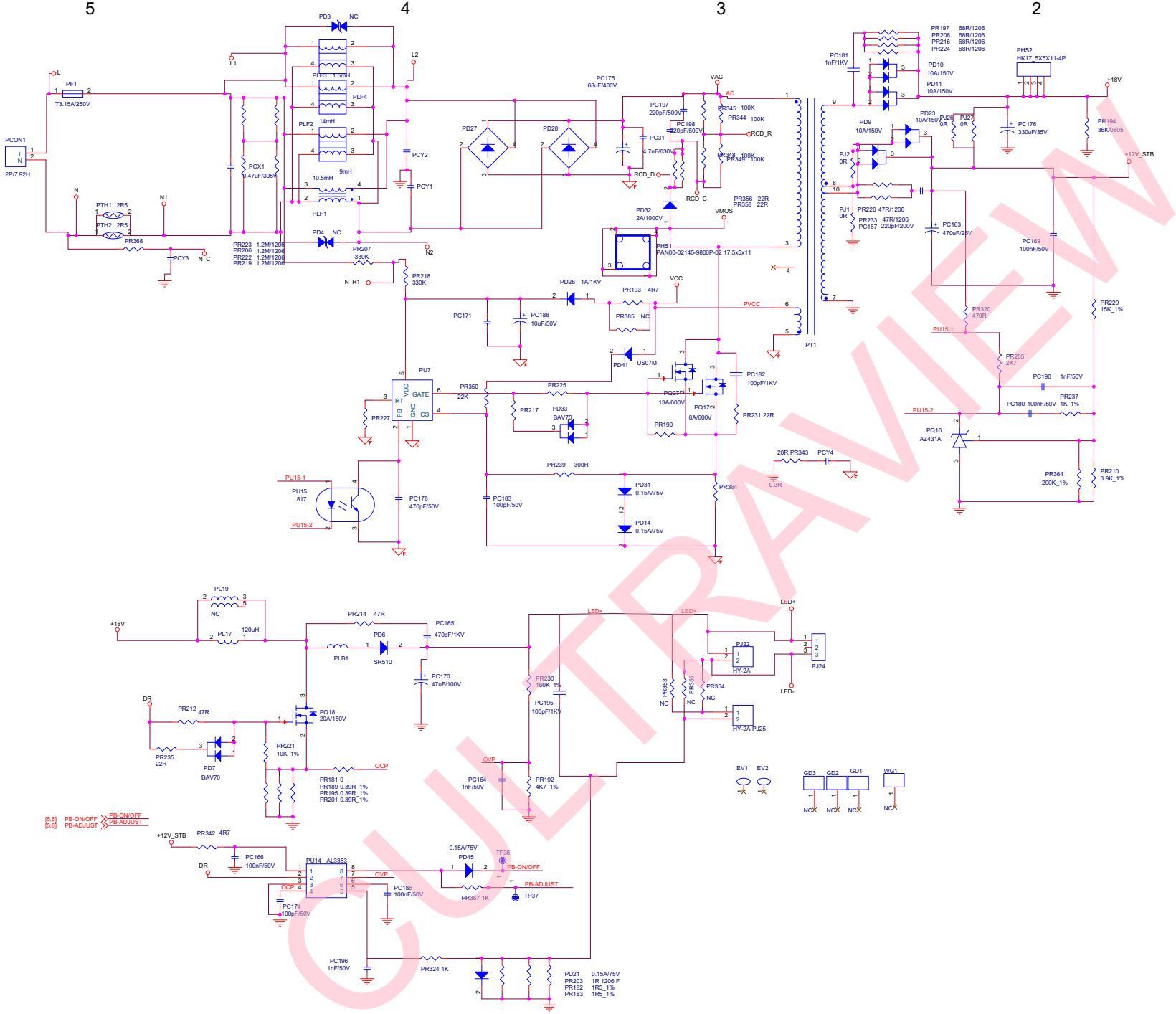

CULTRAVIEW

Cultraview	Title	CV9602_K32
Size A2	Document Number	AC_POWER
		Rev 10
Date: Wednesday, February 28, 2024	Sheet 14 of 14	